BOTTOM HANDLE

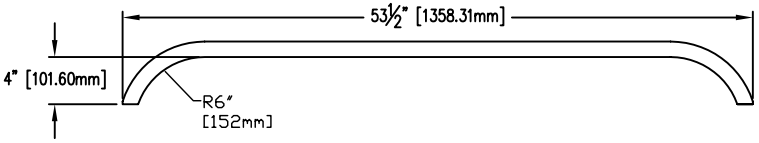

jesco
Since 1932 ®

HANDLE

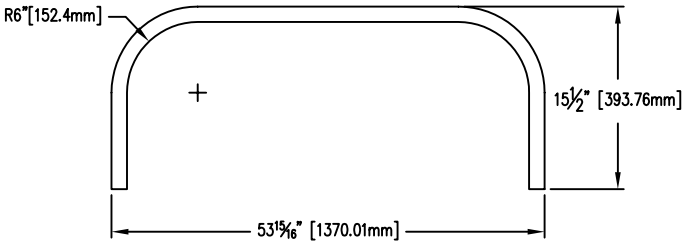

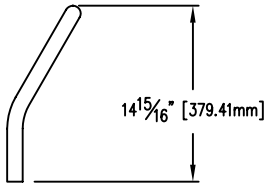

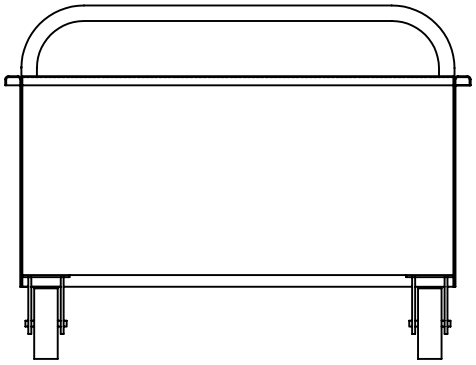

FRONT ELEVATION

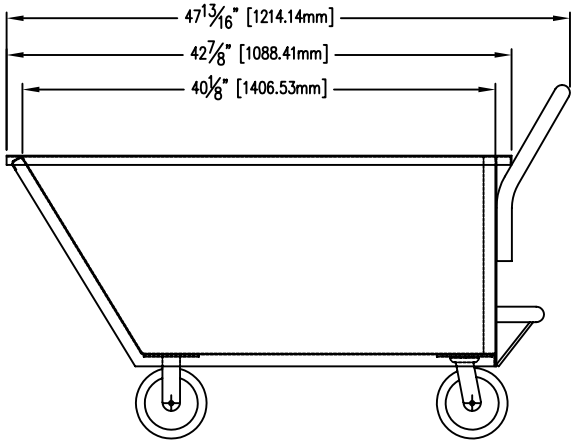

SIDE ELEVATION

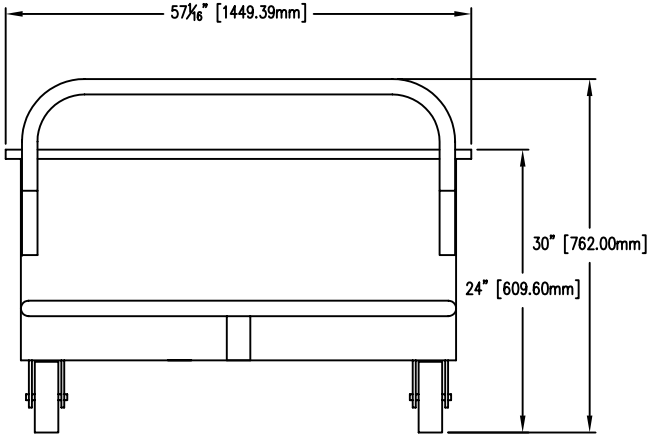

BACK ELEVATION

FIRST PART
APPROVAL REQUIRED
APPROVED BY_____
DATE _____

REV.	DESCRIPTION	BY	DATE
2	UPDATED DWG	JP	10/7/11
1	REVISED RADIUS ON HANDLE	JP	3/7/11

REVISIONS

DESCRIPTION: 3/4 YARD STEEL LOW PROFILE TILT TRUCK
DRAWN BY: JP
SCALE:
MATERIAL:
CHK'D:
DATE: 12/04/10
DRAWING NO.: 271221
TRACED:
APP'D: