FIRST PART
APPROVAL REQUIRED
APPROVED BY _____
DATE _____

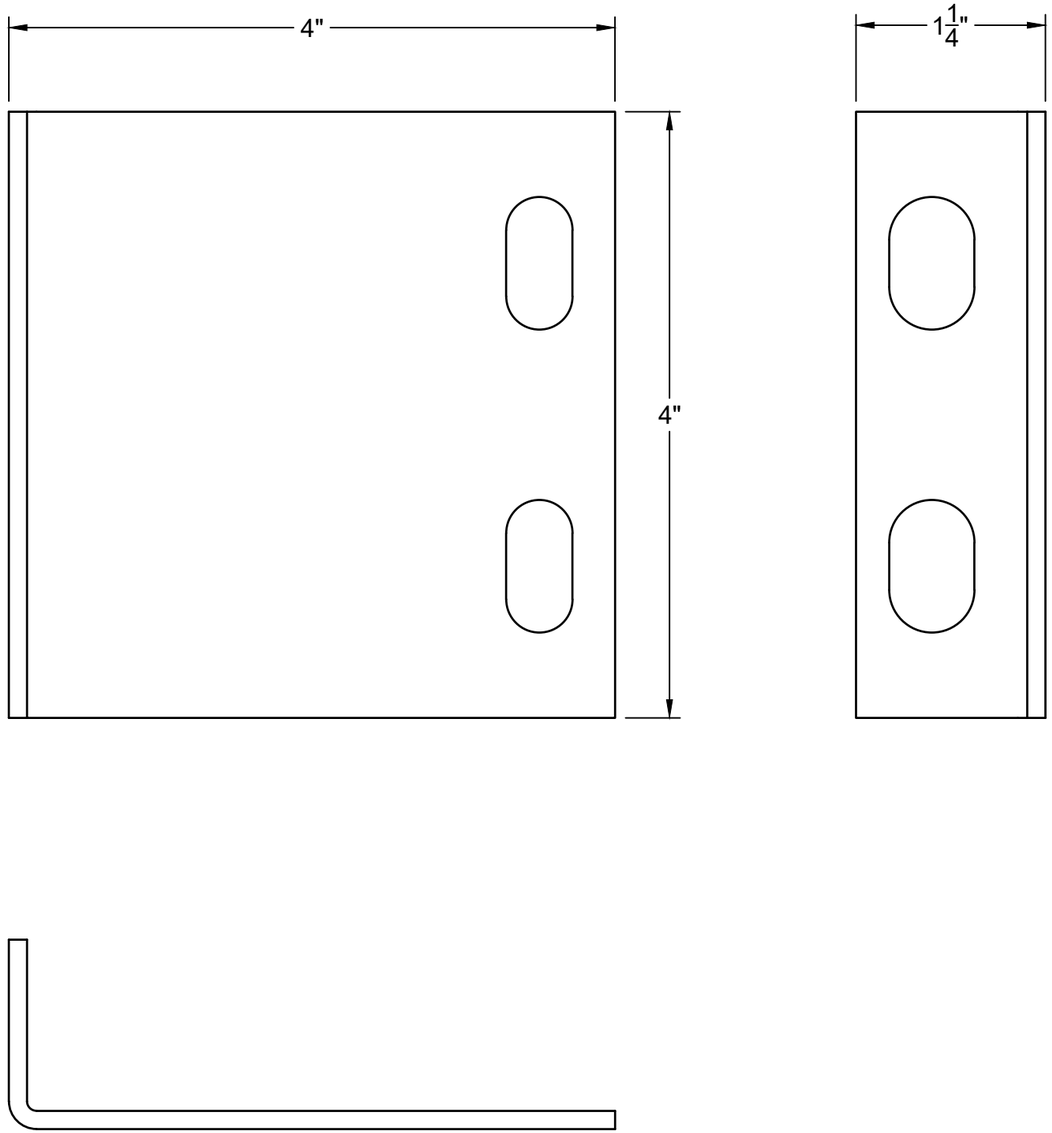

Set of 4

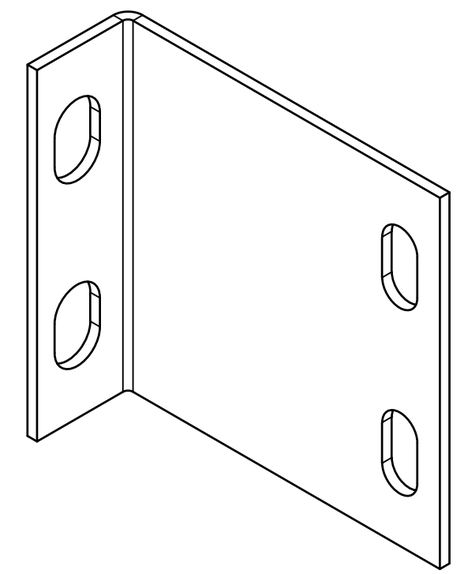

Since 1932
WIPCO
WIRE & IRON PRODUCTS CO.
A DIV. OF JESCO INDUSTRIES
P.O. BOX 388
950 ANDERSON ROAD
LITCHFIELD MI. 49252
PH. # 1-517-542-2903
FAX # 1-517-542-2501

TITLE
Palletgard
4" offset clip
2x1 - 10ga mesh

SIZE	COLOR	DWG NO	REV
B	Dk Gray	393210	

DRAWN	Jesse Pifer	3/21/2024	SCALE 1:1	WEIGHT 3 lbs	SHEET 1/1