SIZE AND QUANTITY REQUIRED					
ITEM #	DESCRIPTION	WIDTH	X	HEIGHT	QTY
PBHF0803	PANEL	8'	X	3'	1
PBHF0303	SIDE PANEL	3'	X	3'	2
X3077	4' X 3' DOOR ASS'Y				2
X3081	8' DOOR TRACK ASS'Y BOTTOM				1
X3082	8' DOOR TRACK ASS'Y TOP				1
X3083	3' KNEE BRACE ASS'Y - LH				1
X3084	3' KNEE BRACE ASS'Y - RH				1
X3087	3' FRONT CORNER ANGLE - LH				1
X3088	3' FRONT CORNER ANGLE - RH				1
X3091	3' CENTER BRACE ASS'Y				1
BP005	PANEL BOLT PKG.				3
BP075	BOLT PKG. FOR STORAGE LOCKER SIDES				3

384180 CEILING OPTION

SIZE AND QUANTITY REQUIRED					
ITEM #	DESCRIPTION	WIDTH	X	HEIGHT	QTY
PBHF0803	PANEL	8'	X	3'	1
X3093	3' CEILING ANGLE				2
BP005	PANEL BOLT PKG.				2

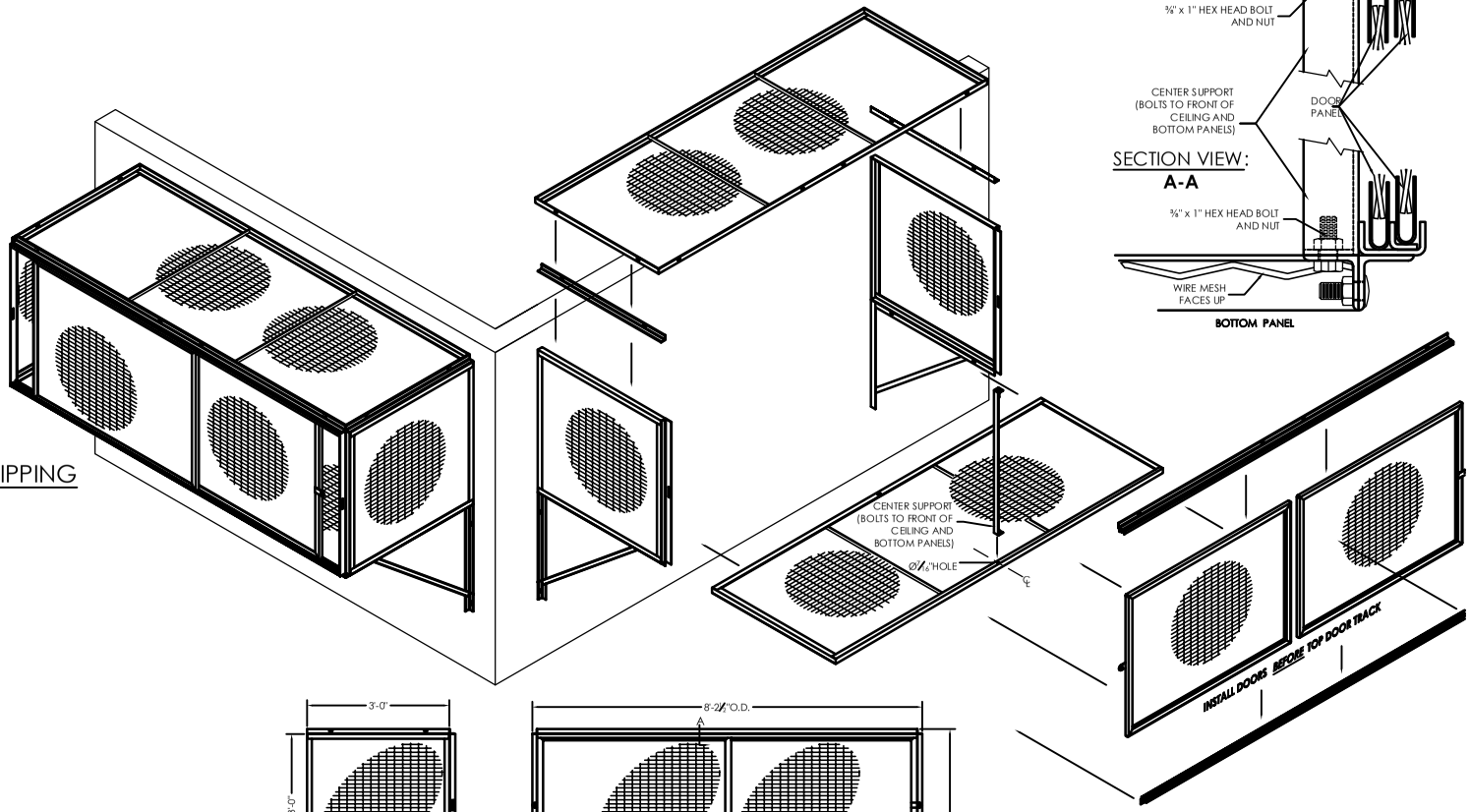

WELD SIDE PANEL TO KNEE BRACE BEFORE SHIPPING

2 x 1 10 GA. OVER CAR
MESH STORAGE LOCKERS SPECIFICATIONS

WIRE MESH: 2 x 1 No. 10 gauge woven wire mesh welded to angle and channel frame

SLIDING DOORS: 16 GA. U-EDGE frames with 2 x 1 mesh welded to frame. Padlock lugs welded to frames.

SIDE PANELS: 1¼" x 1¼" x ⅛" angle frames with 2 x 1 mesh welded to frame.

TOP PANEL: 1¼" x 1¼" x ⅛" angle frames with 2 x 1 mesh welded to frame.

BOTTOM PANEL: 1¼" x 1¼" x ⅛" angle frames with 2 x 1 mesh welded to frame.

BACK PANEL: 1¼" x 1¼" x ⅛" angle frames with 2 x 1 mesh welded to frame.

CORNERS: 1¼" x 1¼" x ⅛" angle, punched to match panels

DOOR LOCKS: Equipped for padlock. -Lock not included.

HARDWARE: All interconnecting hardware is furnished in zinc plated finish, wall and floor anchors optional.

FINISH: One shop coat of water based PM9640 light gray enamel paint.Galvanized and plated parts are shipped as is. THE PAINT FINISH SPECIFIED IS FOR INTERIOR USE ONLY. MATERIAL MUST BE STORED INSIDE IN A DRY WELL VENTILATED AREA. DO NOT STORE OUTSIDE EXPOSED TO THE ELEMENTS.

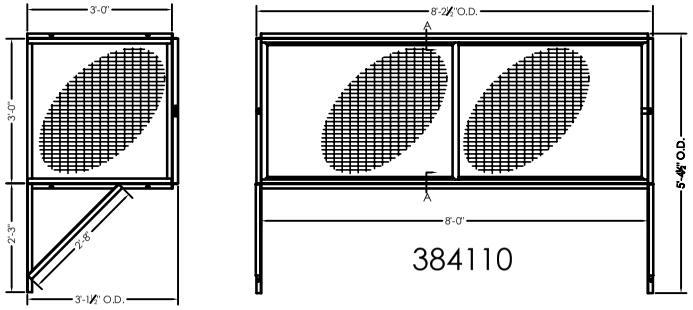

NOTES:

All framing materials are pre-punched for anchoring and assembly.

PANELS: All panels are crated and protected for shipment

FINISH: After shipping and installation, touch-up paint will be required.

BUY AMERICAN!

WARNING:
BEFORE YOU SIGN FOR YOUR ORDER

1. Check the piece count with the Freight Bill of Lading.
2. Check all shipping labels to confirm they are addressed to you.
3. Note all errors on Bill of Lading before you sign (shortage, damage, etc.)
4. Do not throw away your copy of the Freight Bill. Any damage or missing pieces not signed for as such on the Freight Bill of Lading, will be replaced at the replacement cost and freight charges will be charged to deliver the merchandise to your site.
5. Proper Freight Claims must be filed with us within 10 days of receiving order.

REVISIONS

REV #	BY	DESCRIPTION	DATE
A	JP	UPDATED PARTS LIST	08/08/12

SPECIAL ORDERS & NON CONFORMING GOODS ARE NON CANCELABLE

NOTE:
SHIP DATE WILL NOT BE ASSIGNED NOR ANY MATERIALS PURCHASED FOR THIS PROJECT UNTIL ALL OF THE FOLLOWING HAVE BEEN RECEIVED.
(1) FIELD VERIFIED SIGNED SHOP DRAWINGS.
(2) CHANGE ORDER OR P.O. COVERING ANY PRICE MODIFICATION.

WOVEN WIRE PRODUCTS ASSOCIATION

jesco® Since 1933
JESCO® INDUSTRIES INC.
WIRE & IRON PRODUCTS
P.O. BOX 388
950 ANDERSON ROAD
LITCHFIELD MI 49252
JESCO® PH # 1-517-542-2903
WIRE PH # 1-517-542-2353
FAX # 1-517-542-2501

3' X 3' X 8' OVER THE CAR STORAGE LOCKER

ALL FIELD DIMENSIONS VERIFIED BY INSTALLING CONTRACTOR

DATE

ARCHITECT APPROVAL

DATE

PAINT: PM 9641 - LIGHT GRAY PAINT

CUSTOMER:

REV	CUSTOMER NO.	JOB NO.	
D		384110	
DATE 04/19/11	DRAWN BY JP	SHEET 1	