jesco

Since 1932 ®

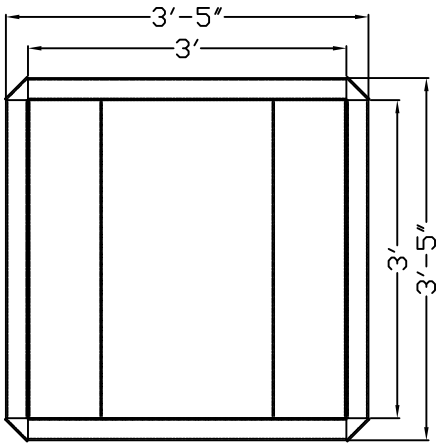

FIRST PART
APPROVAL REQUIRED
APPROVED BY_____
DATE _____

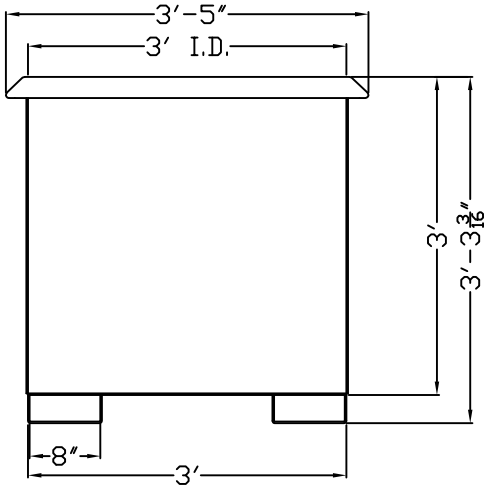

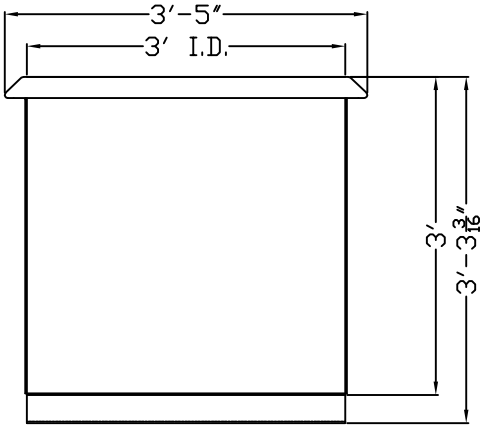

REVISIONS

NO.	DESCRIPTION	BY	DATE
C	REVISED SIDE BENDS	JP	5/12/16
B	REVISED ITEMS 3&4	JP	6/23/15
A	UPDATED SIZE OF ITEM 1&2	JP	10/18/12

DESCRIPTION: ROTATOR BOX – 1 YD 36"X36"X36"		
DRAWN BY: JP	SCALE	MATERIAL
CHK'D	DATE: 11–30–10	DRAWING NO. 260010
TRACED	APP'D	