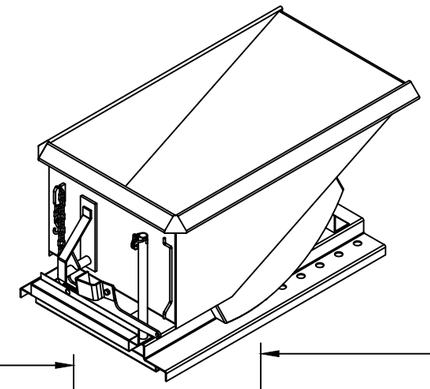

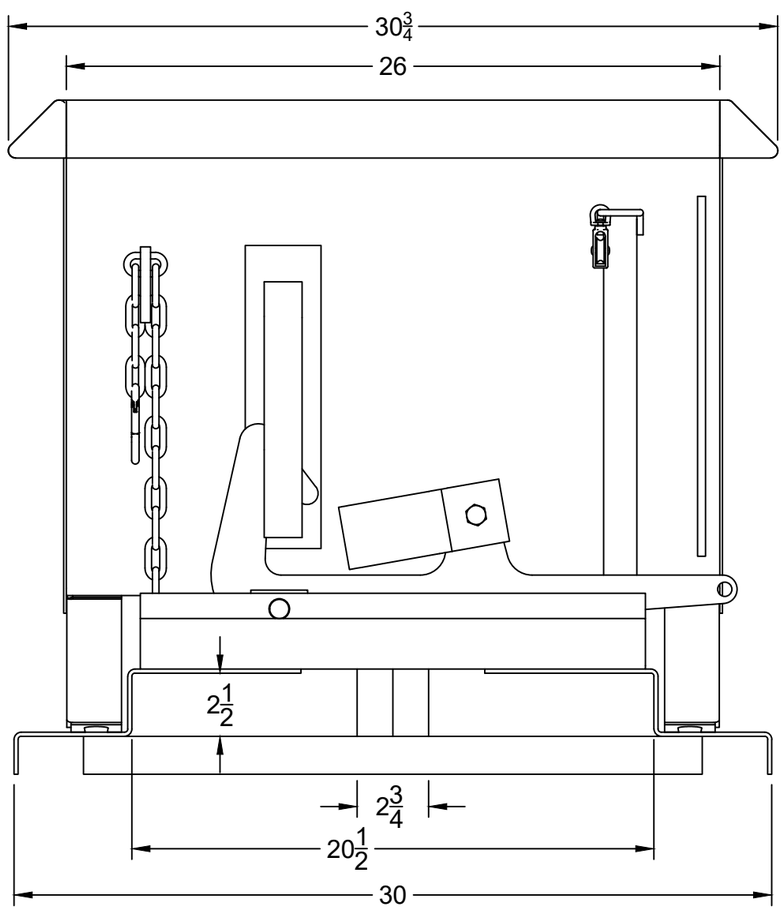

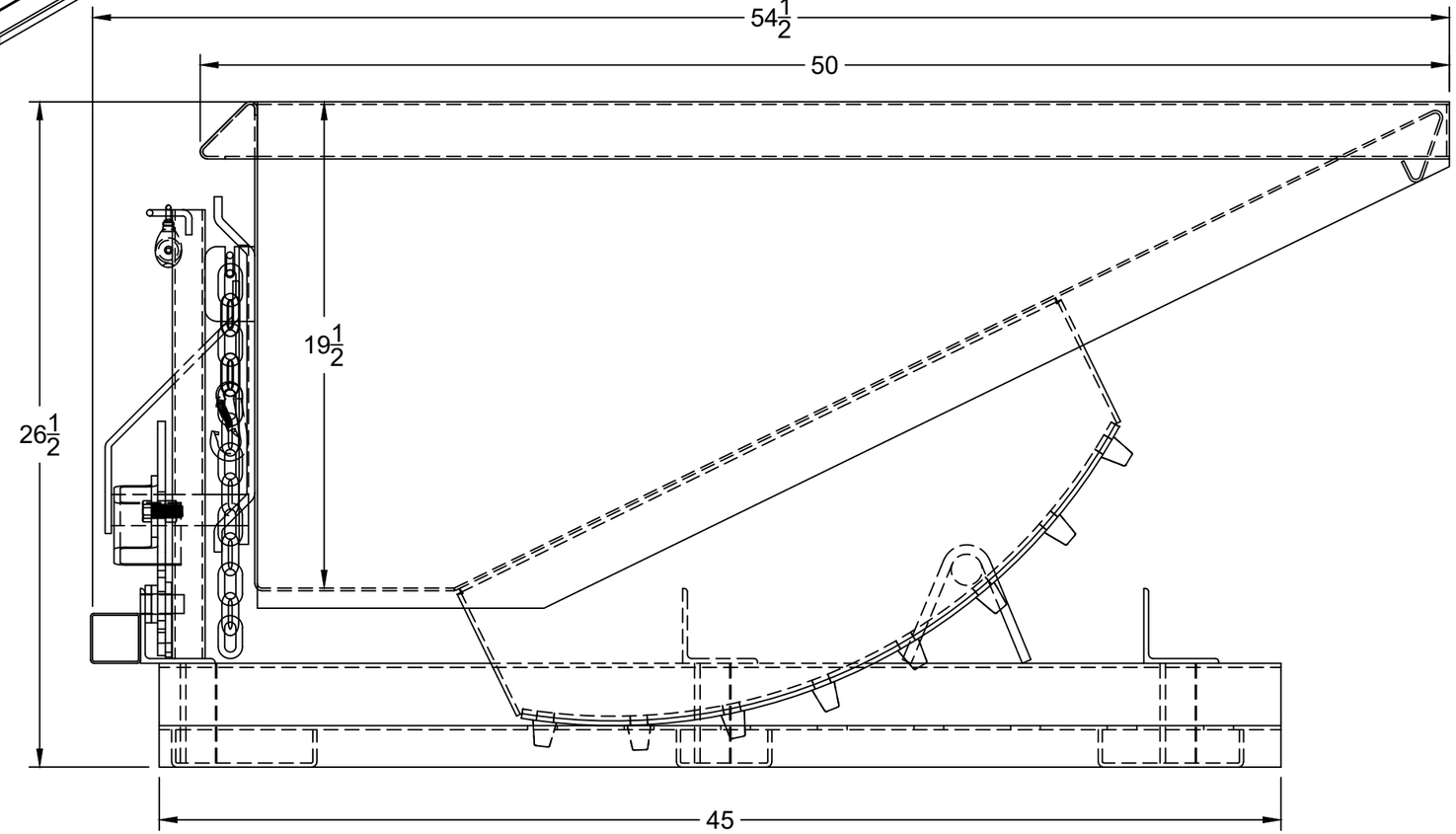

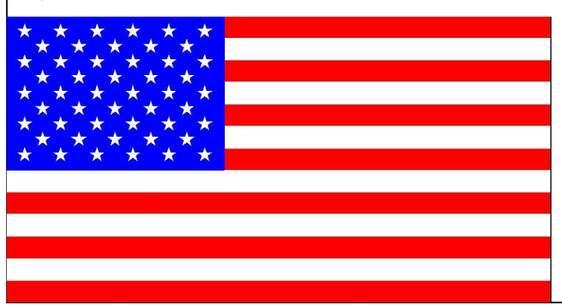

CUSTOMER DRAWING
APPROVAL
APPROVED BY_____
DATE _____

JescoHuskyDumper®

jesco
Since 1932 ®

CUSTOMER				
TITLE Husky Dumper 50"L x 30 3/4"W x 26½"H (12ga body) formed base - 2,000# capacity				
SIZE B	PAINT COLOR Vista Green	WEIGHT 305 lbs	CU/YD .25	
DRAWING # 211701	REV	DATE 12.6.21	DRAWN JP	SHEET 1 OF 1