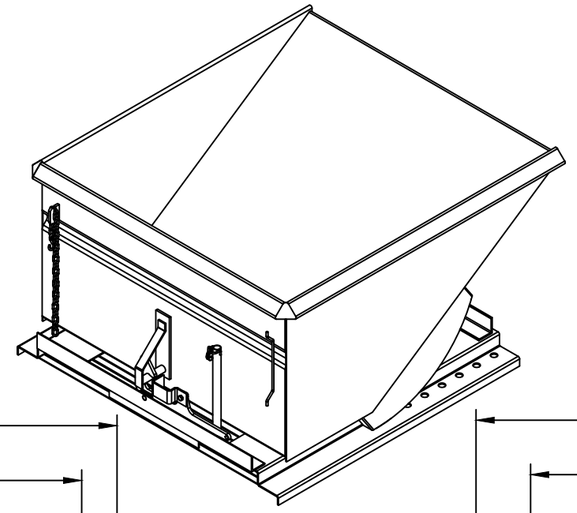

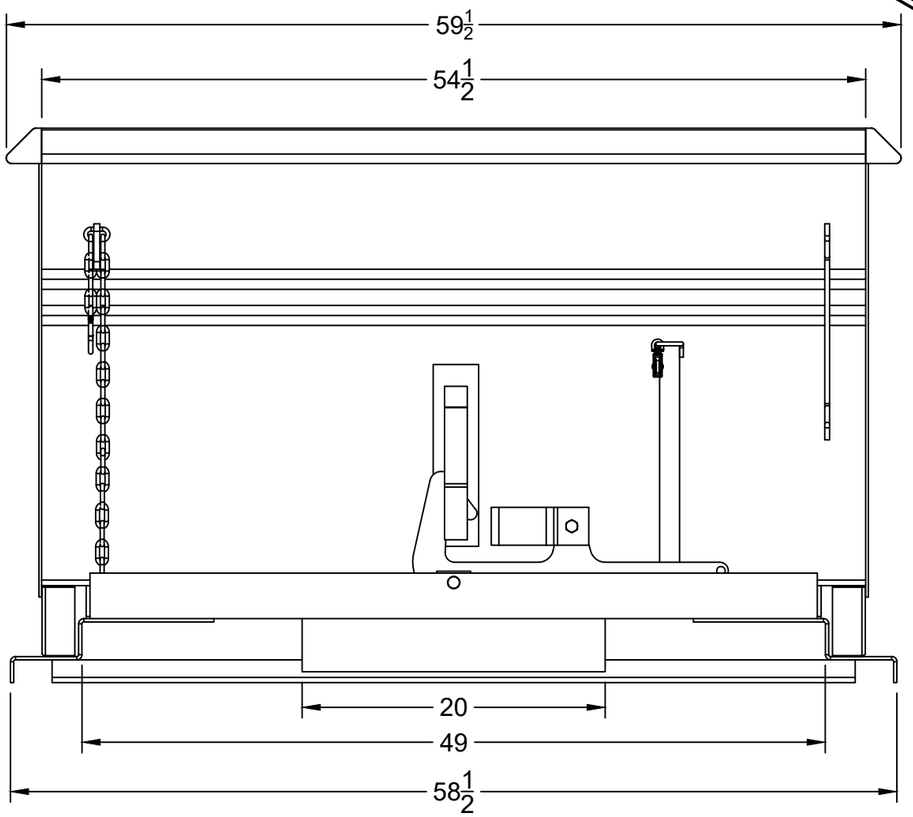

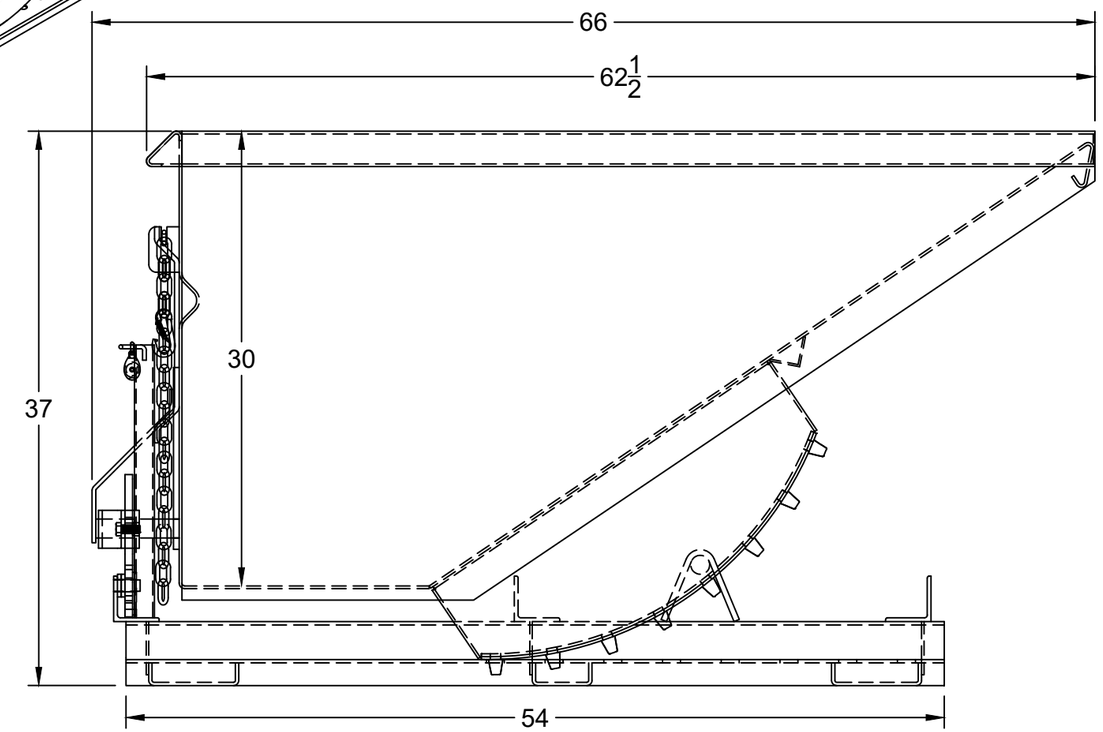

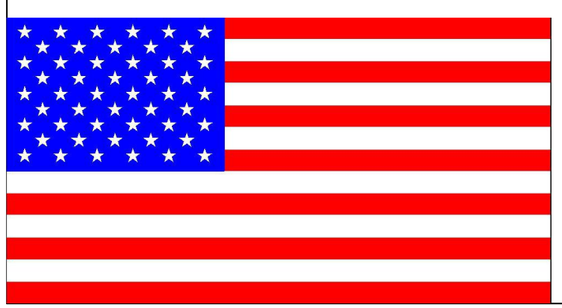

CUSTOMER DRAWING APPROVAL

APPROVED BY _____

DATE _____

JescoHuskyDumper®

jesco Since 1932 ®

CUSTOMER				
TITLE Husky Dumper 62½"L x 59½"W x 37"H - (7ga body) formed base - 6,000# capacity				
SIZE B	PAINT COLOR Vista Green	WEIGHT 785 lbs	CU/YD 1.50	
DRAWING # 211341	REV	DATE 12.3.21	DRAWN JP	SHEET 1 OF 1