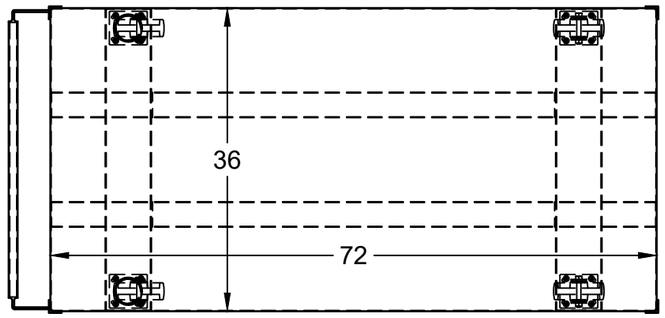

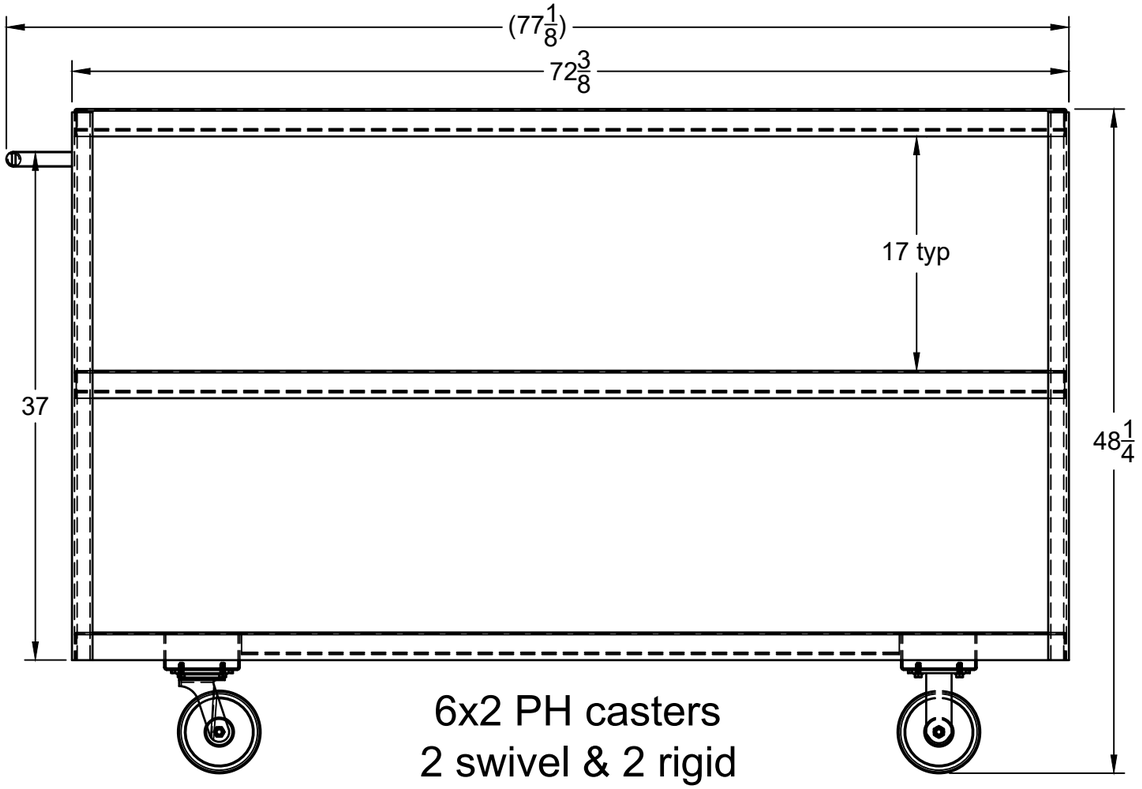

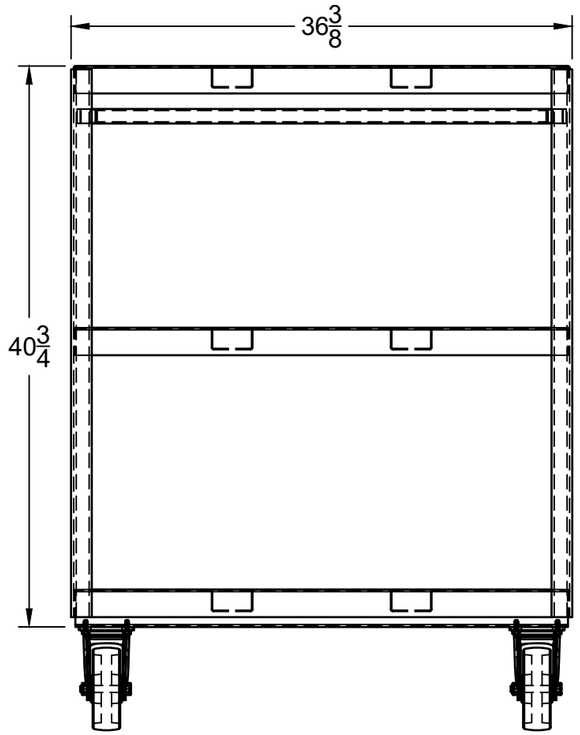

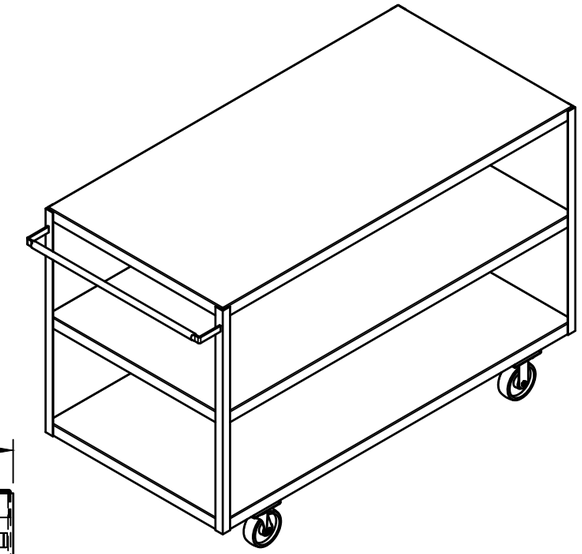

FIRST PART
APPROVAL REQUIRED
APPROVED BY _____
DATE _____

jesco® Since 1932

PROJECT
Shelf truck

TITLE
Shelf truck - 2,000# capacity
72"L x 36"W x 48¼"H (3 shelves)
w/6x2 phenolic casters

APPROVED	SIZE	DUTY	DWG NO	REV
CHECKED	B	Heavy	13488C	
DRAWN Jesse Pifer 2/2/2024	SCALE 1:11	WEIGHT 319 lbs	SHEET 1/1	