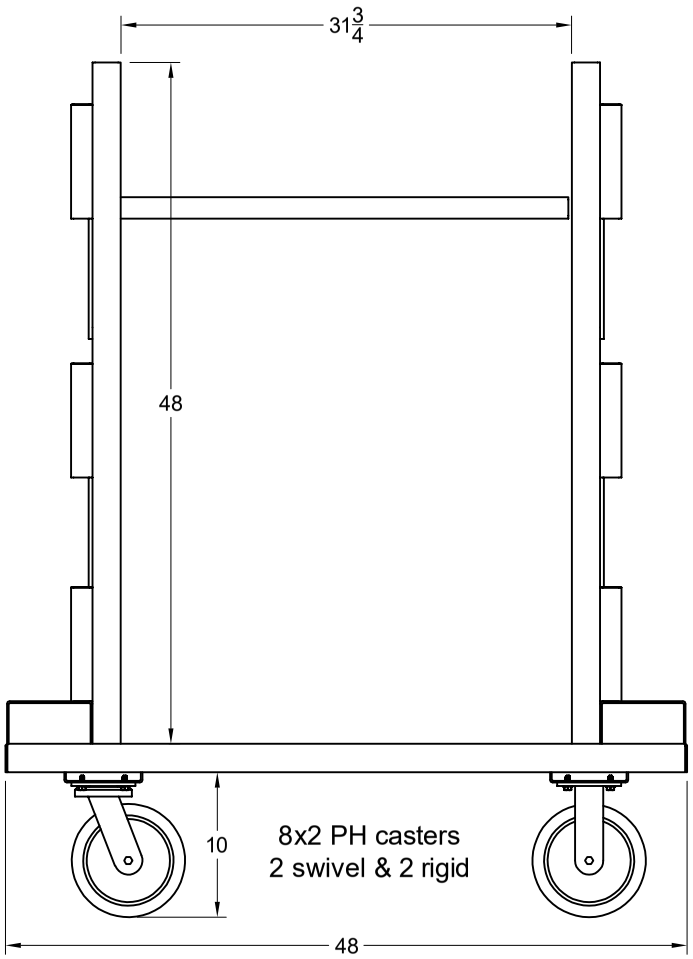

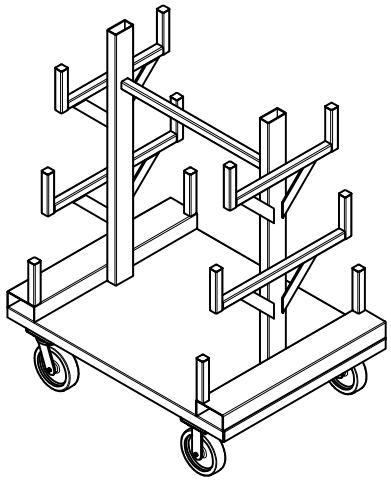

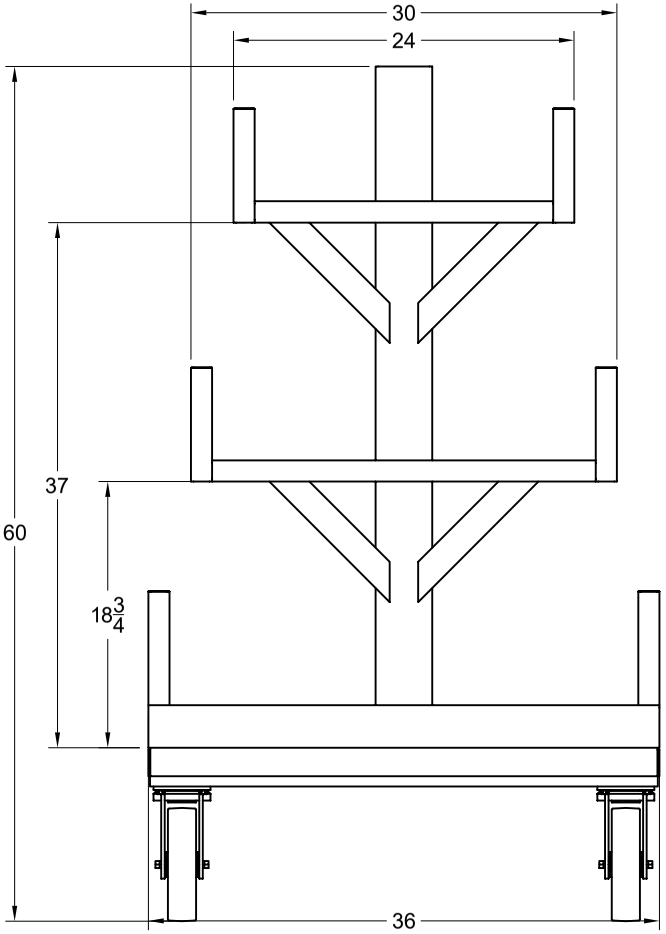

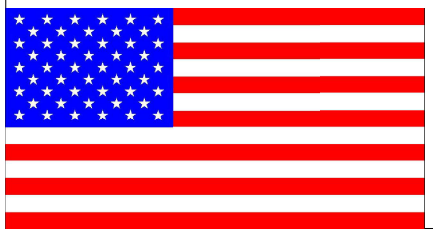

CUSTOMER DRAWING APPROVAL

APPROVED BY _____

DATE _____

jesco Since 1932 ®

PROJECT

TITLE

Bar-Rod truck
48"L x 36"W x 60"H

APPROVED		SIZE	CODE	DWG NO	REV
CHECKED		B		111110	
DRAWN	Jesse Pifer 10/25/2022	SCALE 1:10		WEIGHT 264 lbs	SHEET 1/1