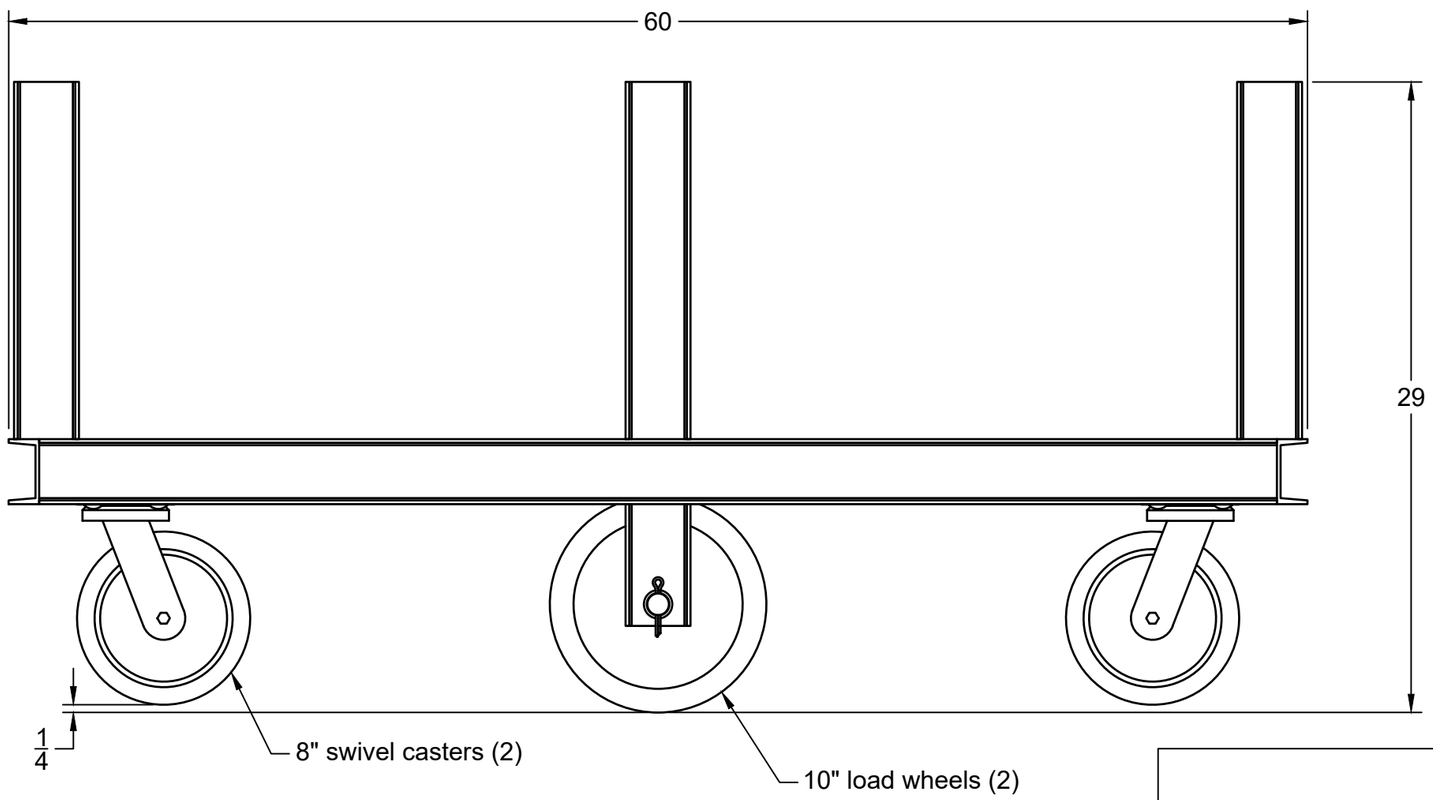

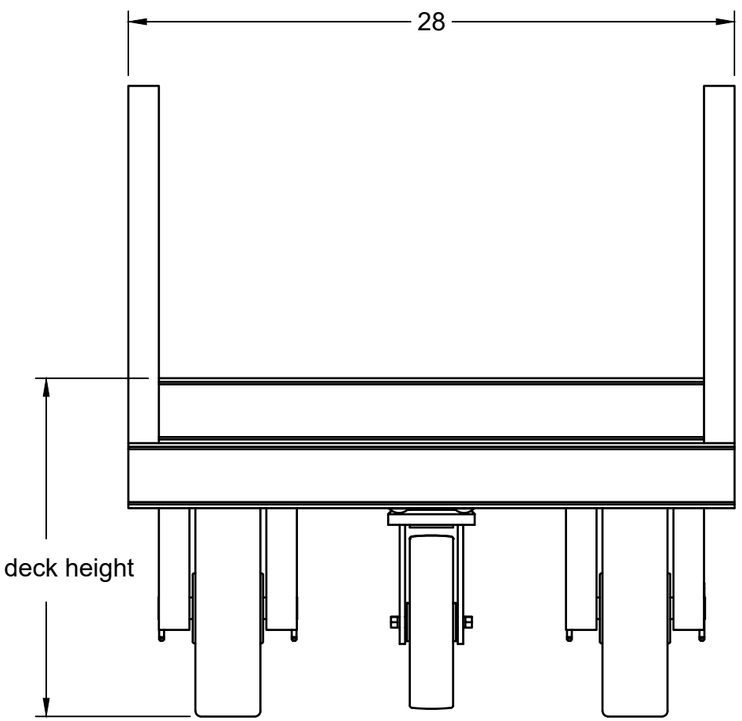

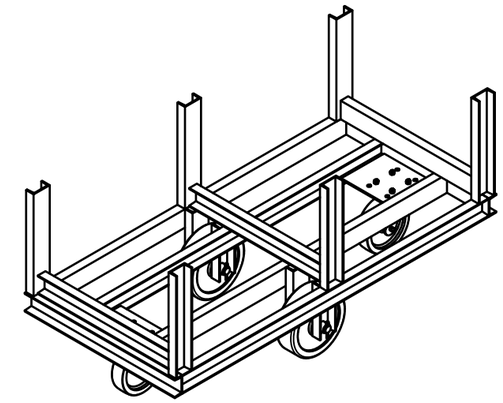

CUSTOMER DRAWING APPROVAL

APPROVED BY_____

DATE _____

jesco® Since 1932

PROJECT

Tube - bar - rod Truck

TITLE

Tube/bar/rod truck - 4,000# capacity 60"L x 28"W x 29"H

Standard model

APPROVED	SIZE	CODE	DWG NO	REV
CHECKED	B		110696	
DRAWN Jesse Pifer 1/23/2024	SCALE 1:7	WEIGHT 222 lbs	SHEET 1/1	