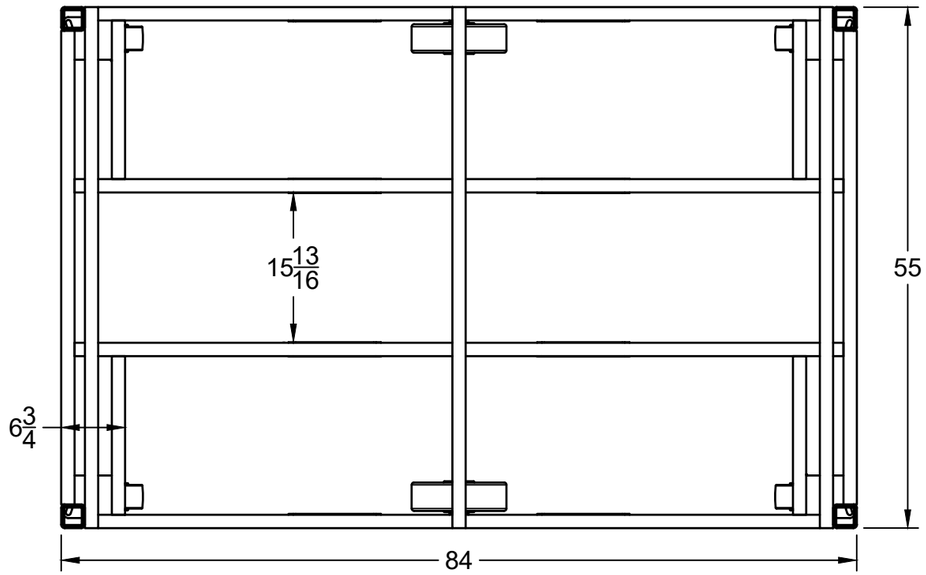

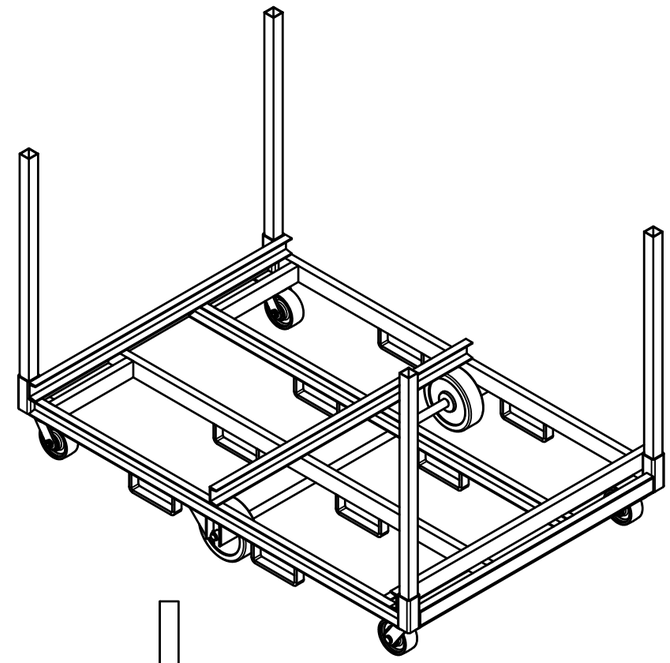

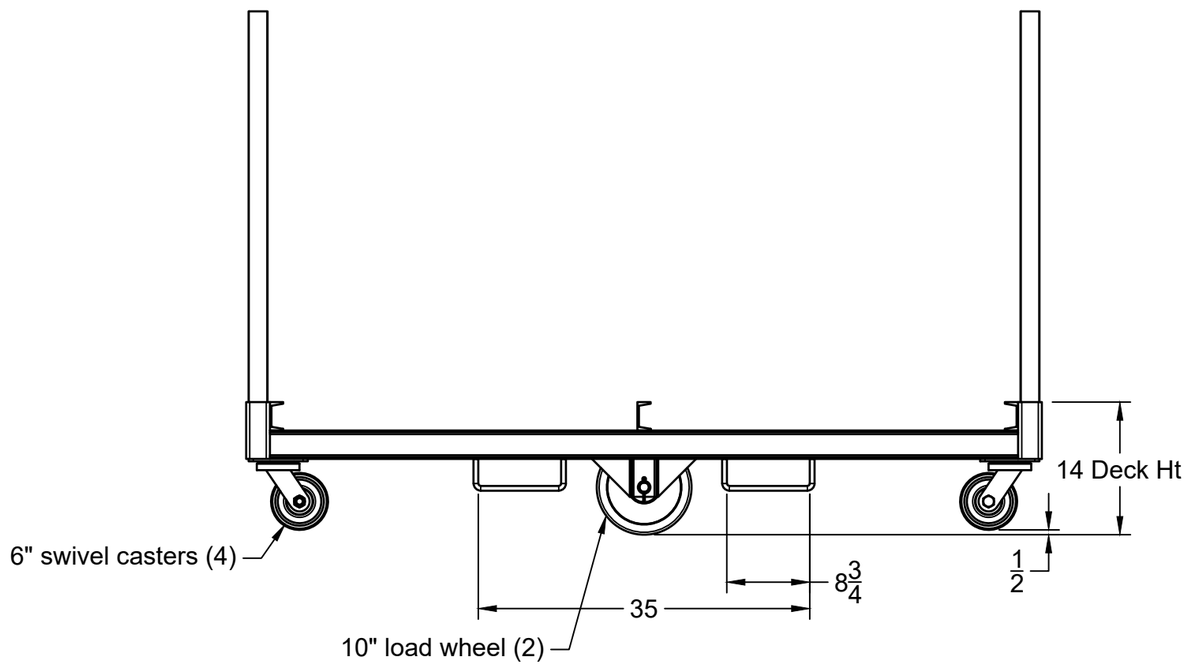

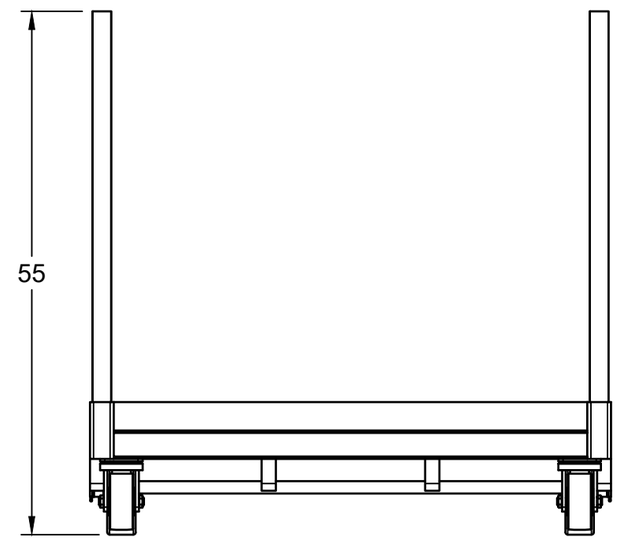

CUSTOMER DRAWING APPROVAL

APPROVED BY _____

DATE _____

jesco® Since 1932

PROJECT
Bunk Truck

TITLE
84"L x 55"W x 55"H Bunk Truck
Extra Heavy Duty - 6,000# capacity

APPROVED	SIZE	CODE	DWG NO	REV
CHECKED	B		110485	
DRAWN Jesse Pifer 2/14/2023	SCALE 1:16	WEIGHT 381 lbs	SHEET 1/1	